Contents

The sights and sounds of a moving steam locomotive are enthralling, and memories of scenes like this are why steam is still popular among railfans and modelers alike. Here a Union Pacific 2-8-2 (Mikado) rolls an eastbound freight train along the Union Pacific's double-track main line across Nebraska in the 1940s. *Linn Westcott*

INTRODUCTION

The continuing allure of steam

The last steam locomotives in Class 1 service on U.S. railroads dropped their fires in 1960—more than a half century ago—and yet steam locomotives still hold a key place in the hearts of modelers and railfans alike. This is no surprise, as steam locomotives were, and are, fascinating machines. They are icons of American history. Their rods, valve gear, and other moving parts are in the open, and the sounds of a steam locomotive in motion leave a lasting impression with viewers. Steam's unique sights and sounds ensure that the steam and steam-to-diesel transition eras will remain popular periods to model.

Steam locomotive models present unique challenges, and this book pulls together more than 20 articles from the pages of *Model Railroader* that will help you get the most out of your models. You'll find tips and techniques to help guide you through detailing, adding Digital Command Control (DCC) and sound, improving mechanical performance, and weathering.

You'll also find chapters on prototype steam locomotives, explaining how these machines worked and what functions were performed by various details and appliances.

Custom machines

Unlike diesel locomotives, which are essentially standardized, off-the-shelf orders from manufacturers, steam locomotives were for the most part custom built by order—not only for a specific railroad, but often a specific route, job, or region on that railroad. Driver size, wheel arrangement, boiler size, and firebox size all varied greatly depending upon the job the locomotives were designed to do. Along with options for individual details (headlights, air compressors, whistles, tenders), this meant steam locomotives of each railroad often had a distinctive appearance.

Although this is part of steam's appeal, it can make it much more difficult for modelers to accurately capture models for the particular railroad they model, since model manufacturers can't practically offer all of the locomotive versions that existed in real life.

Model evolution

Through the 1990s, getting an accurate, highly detailed model of a specific prototype steam locomotive usually meant buying a brass import. Brass manufacturers could produce models in limited runs. The resulting models generally offered excellent detailing and realistic appearance, but with a hefty price tag. Also, performance of brass models—especially those made through the 1970s—often suffered because of poor-quality motors or gearboxes.

Injection-molded plastic models offered a lower-price alternative, and although many ran quite well, they were often somewhat generic, with many details molded in place.

Fortunately for modelers, the past two decades have seen a rise in highly detailed plastic steam locomotive models representing specific prototypes. Not only are these models realistic with many separate detail parts, most are available with DCC and sound as well.

The level of complexity in this book's modeling projects ranges from simple to challenging. You'll find good tips for weathering and detailing that you can complete in an evening (or less!). You'll also find items on detailing and modifying plastic models to represent specific prototypes, and for upgrading older brass models by adding new motors, DCC, and sound.

Although many of these chapters include step-by-step guides, the key is to use each item as an inspiration for your own projects, not necessarily as instructions for duplicating the specific project shown.

Also, by learning about prototype steam components and parts (see Chapters 19, 20, and 21) and learning how steam locomotives work, you'll be better able to apply the information from the chapters on detailing locomotives (Chapters 1-5) to locomotives following the specific prototypes you model.

Be aware that some of the models, detail parts, paints, tools, and other items mentioned throughout the book may no longer be in production. However, a benefit of the age we live in is that with the internet, if a model or part has been made at some point, it's likely still available somewhere. A quick check of eBay will reveal a wide variety of out-of-production models and detail parts still available. Failing that, try a general internet search, which will often lead to online hobby shops and suppliers.

Whether you are looking to upgrade older models, kitbash models to represent specific prototypes, add DCC and sound, increase your knowledge of prototype steam engines, or improve the overall operations of your steam models, you'll find information of value in the following pages.

This Trix HO scale model of a United States Railroad Administration 2-8-2 is an example of the high level of detail available on today's mass-produced steam locomotive models. *Jim Forbes*

CHAPTER SIX

Repower an early brass model

BY BOB VAN ARNEM Photos by the author

Sporting a fresh coat of paint, this 30-year-old HO Sunset Models Union Pacific 4-6-0 looks and runs like new.

My HO scale Sunset Models brass Union Pacific Ten-Wheeler had been one of my favorites since I bought it nearly 30 years ago, but it recently began to show its age. The 4-6-0 lost much of its pulling power and there was a definite increase in motor noise and vibration, so I decided to see if I could restore its performance. I discovered that the black rubber universal joint was slipping. I could have easily replaced it with neoprene model airplane fuel line, but I made a more permanent repair. The important thing here is I wasn't afraid to try using some new skills. These techniques will work with many early models.

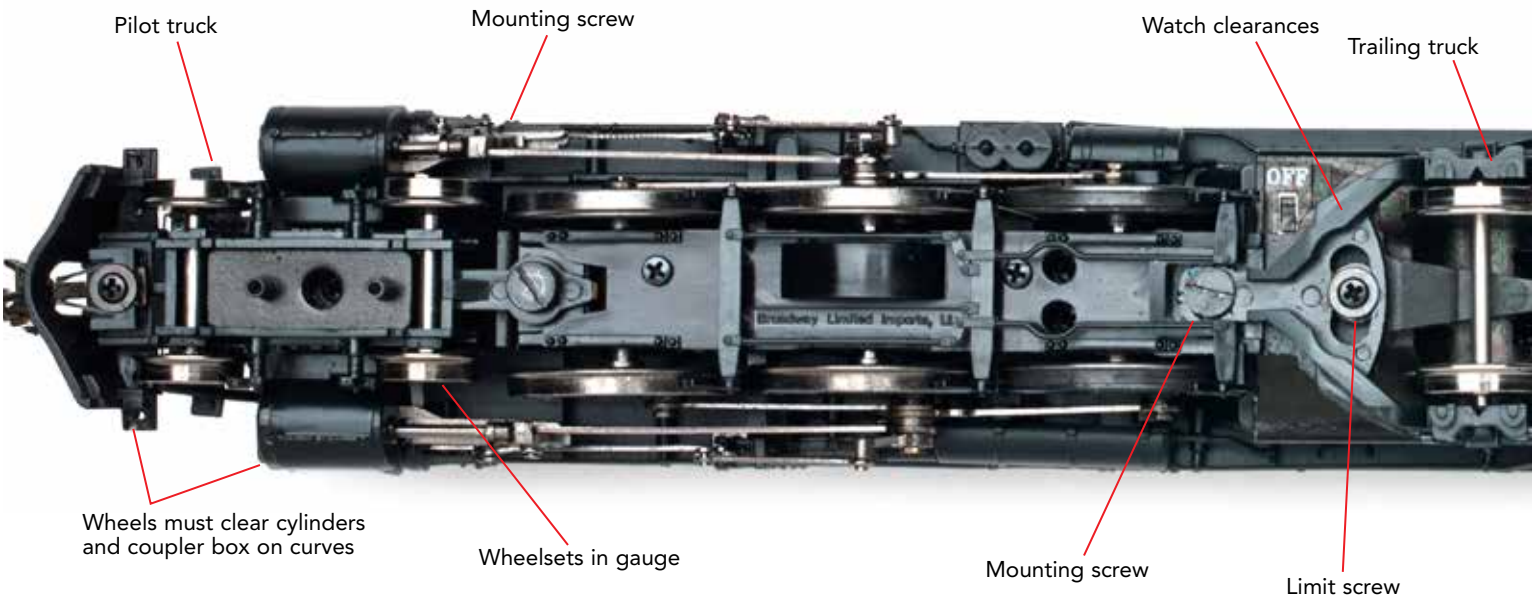

CHAPTER EIGHT

Prevent derailments

BY JIM HEDIGER

Because of their design and construction, steam locomotive models are more prone to derailments and operational issues than diesels. Here are some guidelines for their operation, with a list of potential problem areas—keep an eye on these and your models should stay on the track and run more smoothly.

A major consideration is size. In general, large steam locomotives are sensitive to sharp curves and simply don't perform well on radii that are too tight for them. To help match locomotives with the proper curve sizes, the National Model Railroad Association (www.nmra.org) has a handy chart that relates equipment sizes to curve radii in its Recommended Practice data sheet RP-11 Curvature and Rolling Stock. With these curve relationships in mind, here are eight tips I've learned to improve the performance of my steam locomotives.

1 Prototype steam locomotives and tenders may have anywhere from one to four unpowered trucks that help carry some of the weight. The lead truck is attached to the front of the main frame to help guide the locomotive into curves and through turnouts. A trailing truck rides beneath the cab, where it helps support the firebox. However, these trucks on most models don't carry any weight, and this causes a variety of tracking problems. The pair of trucks that carry the tender help draw current from the rails for the locomotive. The electrical contact strips must make solid contact with the axles.

2 The most common locomotive and tender tracking problems can usually be traced to one or more wheelsets that are out of gauge. Even a small locomotive like a 2-8-0 Consolidation will have problems if its single lead-truck axle has wheels that are out of gauge.

If the back-to-back spacing is too wide, the flanges are forced against the insides of the railheads or switchpoints, where they easily find any irregularities and bounce off the rails. Trucks with narrow wheel spacing will have problems passing through turnouts, as the inside of the flanges will bind or jam across the guardrails, causing the wheelset to pop up and derail.

These gauge problems are magnified in locomotives that have four-wheel lead or trailing trucks, as their longer driving wheelbase tends to push these trucks harder into the outside rail on curves.

Use a National Model Railroad Association standards gauge to check the wheel spacing on all of the axles on each locomotive. Make any

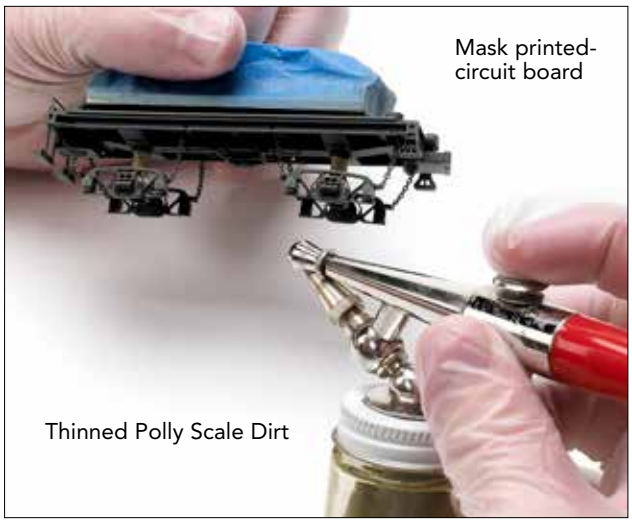

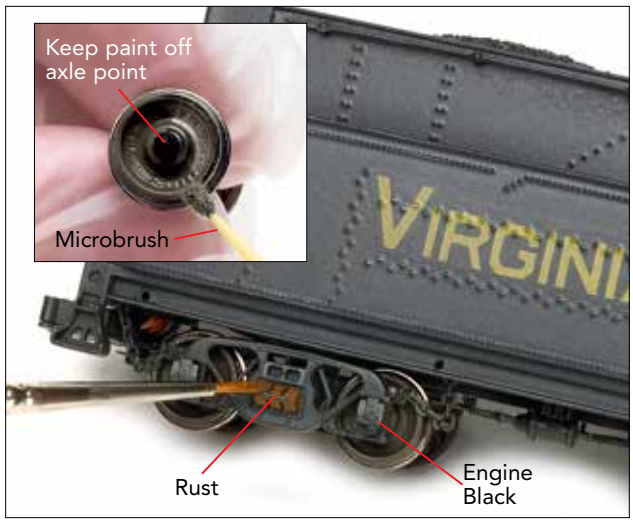

Step 4: Trucks and wheels

Next, I separated the tender from the underframe and removed the wheelsets from the trucks. I then masked the printed-circuit board and inserted lengths of 3⁄16" styrene tube between the truck and bolster. The latter allowed me to easily weather all sides of the trucks. Then I sprayed the underframe with Polly Scale Dirt thinned to the same 4:1 ratio.

Next, I used a Microbrush to paint the wheels and axles Polly Scale Railroad Tie Brown (inset photo, upper right). Be careful to keep paint off the axle points so the wheels would remain free rolling.

After reassembling the tender and reinstalling the wheelsets, I drybrushed the truck sideframes with Polly Scale Milwaukee Road Gray. Drybrushing is a technique in which most of the paint is removed from the brush on a paper towel before it's touched to the model. By lightly touching the brush to the model, it helps bring out raised details and textures.

I painted the leaf springs with Rust. I then painted the bottom of each journal box with Engine Black to suggest a build-up of oil and grease. To make the oil and grease look "shiny," brush on a layer of clear gloss.

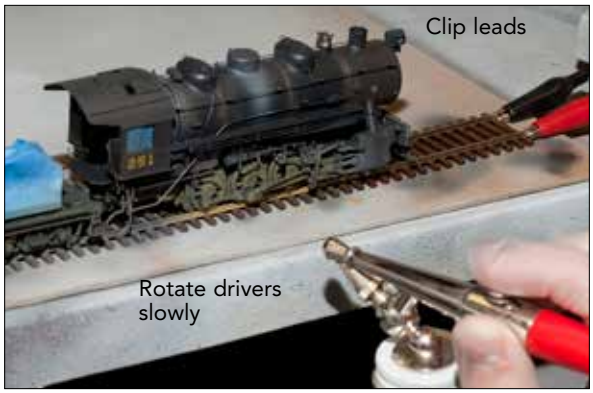

Step 5: Drivers, rods, and valve gear

I put the locomotive and tender on a section of track and attached clip leads from the power pack to the rails. Holding the tender with my left hand, I airbrushed thinned Polly Scale Dirt on the drivers, rods, and valve gear while letting the drivers spin under power. This approach saved me from having to disassemble the entire locomotive to evenly weather the rods and gear components.

Try to avoid getting paint on the treads of the drivers. If you do, simply clean the treads with a cotton swab dipped in Windex before the paint sets.

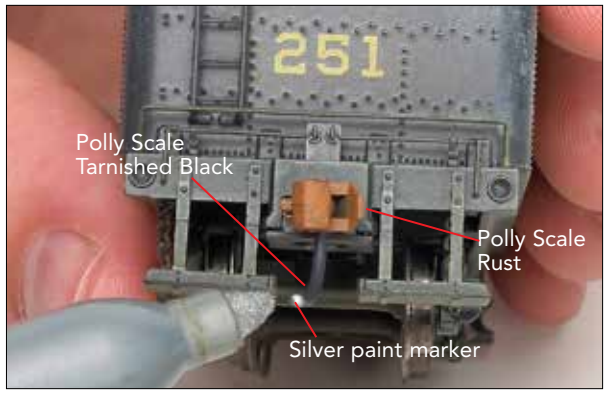

Step 6: Couplers

I finished the 0-8-0 by airbrushing the Kadee no. 5 knuckle couplers with Polly Scale Rust. I thinned the paint slightly to make sure the knuckle spring still worked properly.

After the paint dried, I installed the couplers. I then painted the trip pin Polly Scale Tarnished Black and used a paint marker to color the tip of the trip pin silver. The latter suggests a glad hand on an air hose.

Now Virginian no. 251 is ready to switch the Rogers Yard and pull hoppers up the branch line.

CHAPTER TWELVE

Add DCC & sound to a brass loco

BY PETER HALL Photos by the author

This Balboa HO scale Southern Pacific Mt-4 4-8-2 brass steam locomotive has been upgraded with Digital Command Control and sound. A pair of speakers reside in the tender, which is an upgraded plastic version from Bachmann.

Owners of brass steam locomotives know adding Digital Command Control (DCC) and sound can be rewarding upgrades. The variable is the amount of room in the tender. On my Balboa HO scale Southern Pacific class Mt-4 4-8-2, there wasn't enough room to install two speakers and a decoder. So I had to go to plan B.

The Bachmann 16,000-gallon tender is an excellent reproduction of the SP class 160-C-1 tender. Bachmann offered the Hicken-style Vanderbilt tender separately as item no. 89912, now discontinued. It comes with a front bulkhead that can be removed to gain access to the inside of the tank. Using this tender seemed like the ideal way to add DCC and sound to my 4-8-2. The project also gave me the opportunity to upgrade the details on this tender.

I don't expect many people to do this exact conversion. Instead, you can follow these techniques to do installations in many similar brass or plastic models.

Remove and replace

First, I removed the tender's front bulkhead. Inside is a flat metal weight, a printed-circuit (PC) board, wiring, and a recess for a small speaker, **1**. Wires for the trucks and backup light are attached to the PC board. Since I wanted to preserve the wires for both, I cut them where they attached to the board, twisted them together, and moved them out of the way. Later, I added a mini-plug to each wire.

Next, I removed the screw on the bottom of the tank and slid the factory weight out. I also removed the bottom hatch cover to provide better access. I replaced the weight with a piece of flat ⅛" x 1½" x 8" brass bar stock, **2**. The